Rittal –
RiCell fuel cell system

The environment-friendly power supply for critical infrastructures

FRIEDHELM LOH GROUP

RITTAL®

RiCell fuel cell system

Efficient, autonomous and robust

Reliable, efficient and environment-friendly emergency power supplies for critical infrastructures – that is the domain of the Rittal fuel cell system. This scalable solution guarantees ultimate flexibility in terms of both output and autonomy time, and copes admirably with the most varied ambient conditions. Its particular strengths are to be seen in its ecological compatibility and outstanding economic parameters:

- Emission-free power supply
- Scalable output (5 kW, 10 kW, 15 kW, 20 kW)
- Portable or stationary
- Suitable for both indoor and outdoor applications
- High electrical efficiency
- Minimal service and maintenance costs

With such versatility, the fuel cell system represents a convincing power supply for a broad range of applications:

Traffic

Suitable as a mobile primary power supply for emergency use at the scene of an accident, for example for illumination or temporary traffic signs. Emergency power can also be provided at a variety of supply voltages to system control centres, for example for railway networks, along major waterways or at airports.

Environment

Autonomous measuring stations, whether for environmental monitoring or water management, require reliable, ecological power supplies. Fuel cell systems are ideally suited for such applications, as their emission-free operation is also unable to falsify the collected data. The same applies for use in cities with high dust loads in the atmosphere.

Energy

Fuel cell systems are predestined for use in combination with renewable energy solutions, and to support and safeguard power generation infrastructures. Ideally, they can be integrated directly into the DC applications for power station control. Both temporary power supplies and backup functions are significant.

IT

The classic emergency power supply application. Fuel cell systems provide for additional redundancy in extremely critical high-availability applications, and serve to replace ecologically harmful fossil-fuel generators. As primary power sources, fuel cells are able to handle the short-time deployment of mobile data centres.

Telecommunications

Fuel cells are substitutes for battery-powered backup systems. Particularly in mobile telecommunication, the freely scalable backup time has proved a major advantage. The longer the autonomy time, the more lucrative it becomes to use fuel cells. Mobile telecommunication centres and temporary telephone booths for events are just two of the many direct power supply applications.

Mining/tunnel engineering

The extreme conditions encountered in tunnels or mines demand robust technical solutions. Rittal has gathered a wealth of know-how in reliable packaging for sophisticated technologies. Fuel cell systems are thus especially suitable as emergency power supplies to maintain the control and monitoring systems or lighting installations of critical infrastructures in the fields of mining and tunnel engineering.

RiCell fuel cell system

5 kW

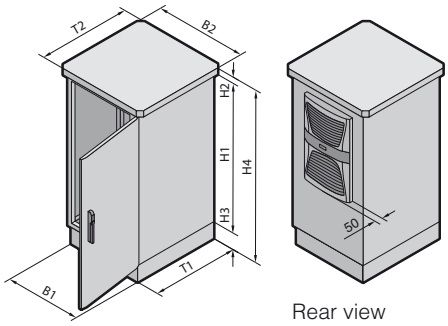

Rear view

Application:
- Emergency power supplies, e.g. for mobile telecommunication base stations
- Indoor and outdoor use
- Temporary power supplies
- UPS applications
- Primary power supplies for short-time deployment
- High-availability applications

Material:
Enclosure frame:
Stainless steel 1.4301 (AISI 304)
Door, side panels, roof:
Aluminium AlMg3,
powder-coated in RAL 7035

Supply includes:
Ready-to-connect fuel cell system including climate control. Hydrogen supply not included.

Available on request:
- Cascadable up to 4 systems
- Output voltage 230 V AC, 24 V DC or 120 V DC
- Housing for gas cylinders
- Other communication protocols

RICELL
FUEL CELL PERFORMANCE

Width (B1) mm	850
Height (H1) mm	1220
Depth (T1) mm	850
Rain canopy width (B2) mm	920
Rain canopy height (H2) mm	80
Rain canopy depth (T2) mm	920
Base/plinth height (H3) mm	100
Overall height (H4) mm	1400
Weight (kg)	320
Model No. CS	**9782.055**
Fuel cell	
Minimum output	1000 watts
Maximum power output	5000 watts
Output voltage (adjustable)	–48.0 to –55.5 V DC
Maximum current limit	115 A DC
Maximum residual ripple	±250 mV, 100 mV RMS
Noise generation	< 60 dB(A) at distance of 1 m
Water emission	max. 4.2 l/h
Standby consumption	approx. 50 W at 48 V DC; with heating approx. 500 W
Hydrogen supply	
Gas type	Hydrogen, purity 99.95%, class 3.5
Consumption	34 slpm (standard litres per minute) at 3 kW; 63 slpm at 5 kW
Typical autonomy time	Freely scalable with bottle batteries; 50 l hydrogen at 200 bar equates to approx. 2 h autonomy at 5 kW full load
Input pressure	4.4 to 7.6 bar
Ambient conditions	
Temperature range	–40°C to +50°C; output reduction: 4.92 kW at +35°C, 4.85 kW at +45°C, 4.55 kW at 50°C
Relative humidity	5% to 95%, non-condensing
Height above mean sea level	–60 m to 4000 m; from 457 m, output reduction by 75 W per 305 m
Certification	CE
Monitoring	
Programmable start voltage	–48.0 to +55.0 V DC
Programmable start delay	max. 50 sec.
Interfaces	RS232 and USB as standard; modem and Ethernet/IP optional
Software (WINDOWS)	Graphic user interface with display for status, event log and control
Alarm outputs	4 floating contacts: “H2 low”; “Non-critical error”; “Serious error”; “FC in operation”

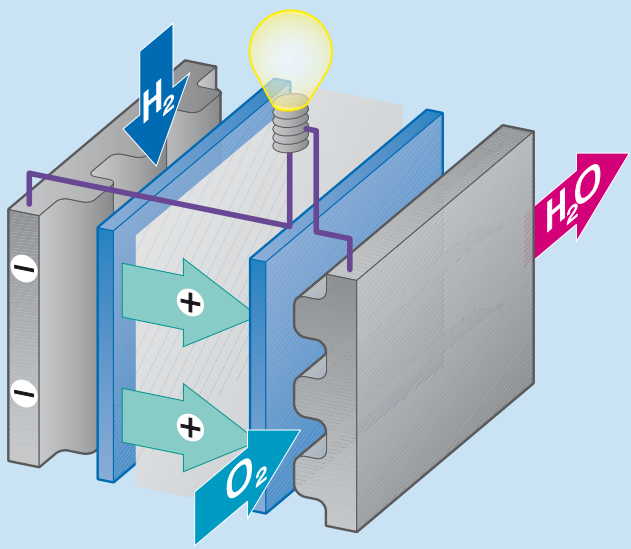

How a fuel cell works

Fuel cells convert the chemical energy arising from the reaction between hydrogen (H_2) and oxygen (O_2) directly into electrical energy, water and heat.

- A fuel cell essentially consists of two electrodes separated from each other by an electrolyte.
- At one electrode, the hydrogen is separated into positively charged protons and negatively charged electrons.
- At the other electrode, oxygen molecules (O_2) are dissociated (separated) and are able to absorb electrons at the electrode.
- The H_2 ions pass through the electrolyte to the positive electrode where they react with the O_2 ions to form water.
- The two electrodes are connected to one another via an external load so that an electric current flows. The flow of current is supplied directly by converting a significant portion of the chemical energy from hydrogen and oxygen into electrical energy.

RiCell fuel cell system. Your direct line to us.

I would like to receive further information on the following aspects:

- ❑ Consulting
- ❑ Project engineering
- ❑ Commissioning
- ❑ Training
- ❑ Service

Application:

❑ Indoor ❑ Outdoor

Output range:

- ❑ 5 kW
- ❑ 10 kW
- ❑ 15 kW
- ❑ 20 kW
- ❑ Other _____

From:

Surname / first name

Company / customer no.

Department / function

Address

Telephone

E-mail

We would be pleased to meet you in person to offer our advice.

04/08 · E680

Rittal GmbH & Co. KG · Postfach 1662 · D-35726 Herborn
Telephone: +49(0)2772 505-0 · Telefax: +49(0)2772 505-2319 · eMail: info@rittal.de · www.rittal.com

Switch to perfection RITTAL